Kelly EV Power Unit

OBC + DC/DC Converter

User's Manual

Rev.1.1
July, 2022

Contents

1. Introduction

This manual introduces the Kelly EV Power Unit, which integrates a high-efficient on-board charger and a DC/DC converter. It saves space, weight, and cabling, thereby minimizing the cost of inventory, installation, and service. It is quite efficient and reliable with a compact size.

Kelly EV Power Unit is designed for electric vehicles, such as electric sedan, electric van, electric golf, electric light truck etc.

Read the manual carefully and thoroughly before using the Power Unit. If you have any questions, please contact the support center of Kelly Controls, Inc.

2. Features

2.1. Features of On-Board Charger

- High efficiency, light weight and quiet operation
- Automatic operation for ALL Lead Acid Batteries Flooded, AGM or Gel Cell, and Lithium Batteries.
- With powerful microcontroller, can more intelligently manage and maintain each cell, improve battery utilization, prevent battery overcharge and discharge, pro-long battery life, and monitor battery status.
- With cooling fan, good heat dissipation
- LED indicator light, all aluminum shell, beautiful and reliable
- Input/output protections
- Intelligent charging: stop work after charging completed; auto recharge when the battery voltage is lower than the set value.
- IP66 enclosure
- Safety Standard: 1(iec364-4-41)

2.2. Features of DC/DC Converter

- No arc
- Can be controlled by key switch directly, no need of external relay
- Input/output protections
- Low standby current: 1mA
- Isolate between input and output
- IP66 enclosure

3. Electrical Specifications

3.1. Input Specifications

Item	Specifications
OBC	
Input Voltage	220VAC±15%
Input Current	≤8A
Input Frequency	50Hz±10%
Leak Current	<0.75mA at full load, meet to Class II
AC Power Factor	≥0.98
DC/DC	
Input Voltage	DC 48V-156V

3.2. Output Specifications

Item	Specifications
OBC	
Output Voltage	DC 48V-156V
Output Current	9.5A-30A
Output Power	1200W-1500W
Efficiency	≥93%

DC/DC	
Output Voltage	DC 12.2V
Rated Output Voltage	DC 13.5V
Output Current	40A, 50A
Output Power	480W, 600W
Max Efficiency	93%
Ripple coefficient	≤1%

3.3. Protection Specifications

Input Protection	Over voltage protection: shut down, auto-recovery
	Under voltage protection: shut down, auto-recovery
Output Protection	Over voltage protection: shut down, auto-recovery
	Under voltage protection: shut down, auto-recovery
	Over temperature protection: reduced current output at 70℃, shut down at 85℃, auto-recovery
	Short circuit protection: shut down, auto-recovery
	No-load protection: no output when unconnected with battery
	Auto-stop protection: stop the vehicle at charging

3.4. Environmental Specifications

Item	Specifications
Operating Temperature	-20℃ ～ +90℃ (case temperature)
Storage Temperature	-40℃ ～ +100℃
Relative Humidity	0% ～ 95%
Dimensions	280mm*128.5mm*89.05mm
Weight	3.15KG
Altitude	⩽5000m
Acoustic Noise	⩽30dB

3.5. Reliability Specifications

Item	Description
MTBF	Average operting life≥3000H (25℃, full load)
Vibration Test	Passed test: 5mm/50Hz/600s

3.6. Safety Specifications

Item	Specifications	
Insulation Resistance	Input to output	DC500V 50MΩ min (25 ℃, Humidity≤70%)
	Input to case	DC500V 50MΩ min (25 ℃, Humidity≤70%)
	Output to case	DC500V 50MΩ min (25 ℃, Humidity≤70%)
Hi-Pot	Input to output	1500Vac 50Hz 1minute ≤10mA
	Input to case	1500Vac 50Hz 1minute ≤10mA
	Output to case	1500Vac 50Hz 1minute ≤10mA

3.7. Charging Indicator

LED Indicator	Battery level
Green	100%
Red	<80%
Yellow	>80%

4. Naming Regulations & Models

4.1. Naming Regulations

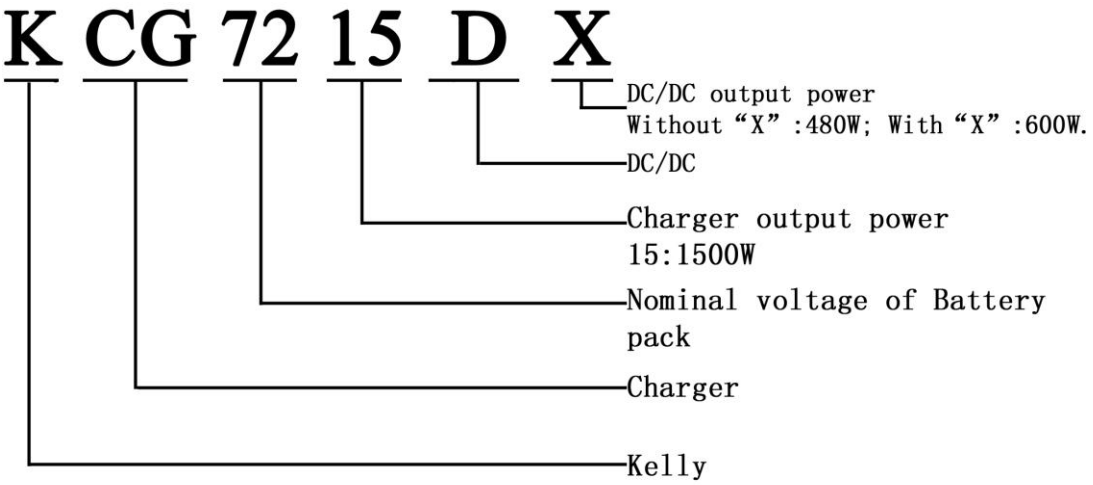

4.2. Models

Models	OBC Power	OBC Output Current	DC/DC Output Power
KCG4812D	1200W	24A	480W
KCG4815DX	1500W	30A	600W
KCG6012D	1200W	19A	480W
KCG6015DX	1500W	24A	600W
KCG7212D	1200W	16A	480W
KCG7215DX	1500W	21A	600W
KCG8415DX	1500W	17A	600W
KCG9615DX	1500W	15A	600W
KCG10815DX	1500W	13A	600W
KCG12015DX	1500W	12A	600W
KCG14415DX	1500W	10A	600W
KCG15615DX	1500W	9.5A	600W

KCG7215DX means: 2 in 1unit which integrates a 72V/1.5KW charger and a 600W DC/DC converter.

5. Wiring and Installation

5.1. Connections of DC/DC

Description	Wires
Input	Red: B+ Black: B- Pink: Key switch of DC/DC
Controllable Output	Red: + (controlled by a key switch) Black: GND Yellow: Driving disable signal 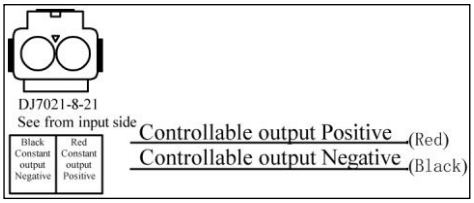

5.2. Installation Dimensions

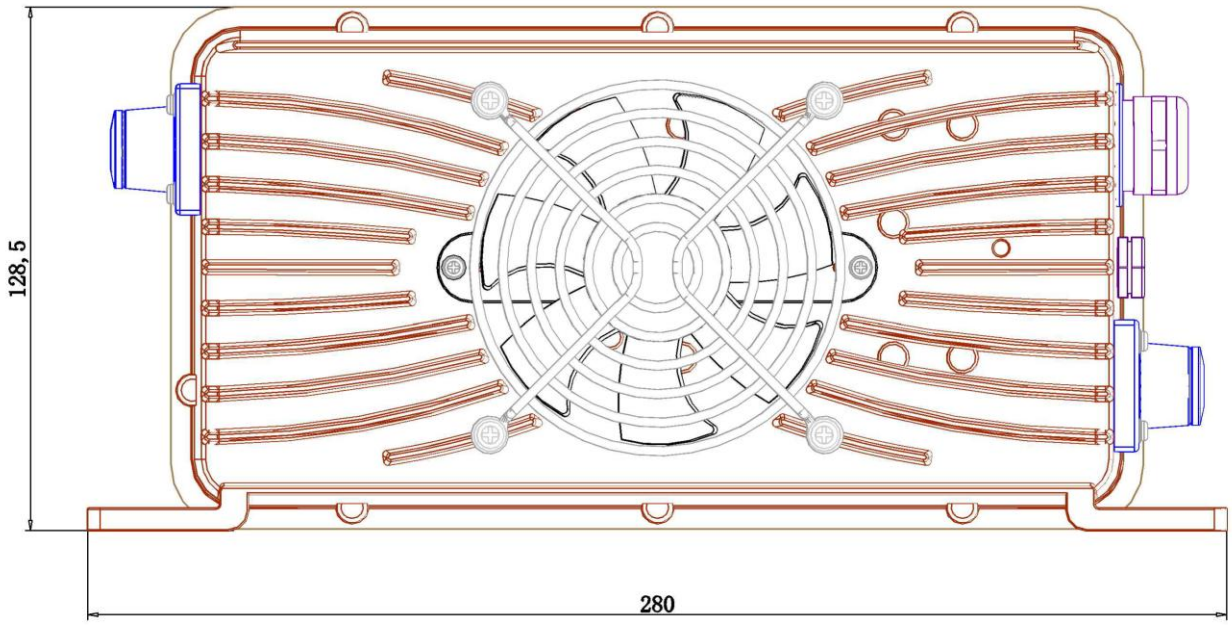

Figure 1: Top view (Dimensions: mm)

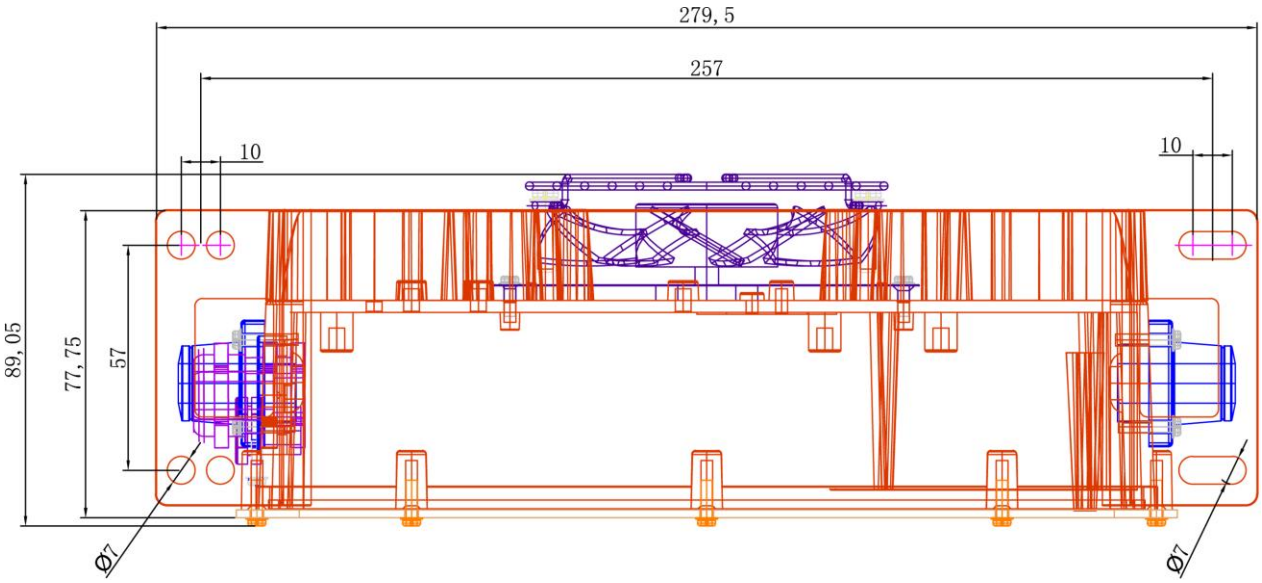

Figure 2: Side view (Dimensions: mm)

5.3. Standard Wiring

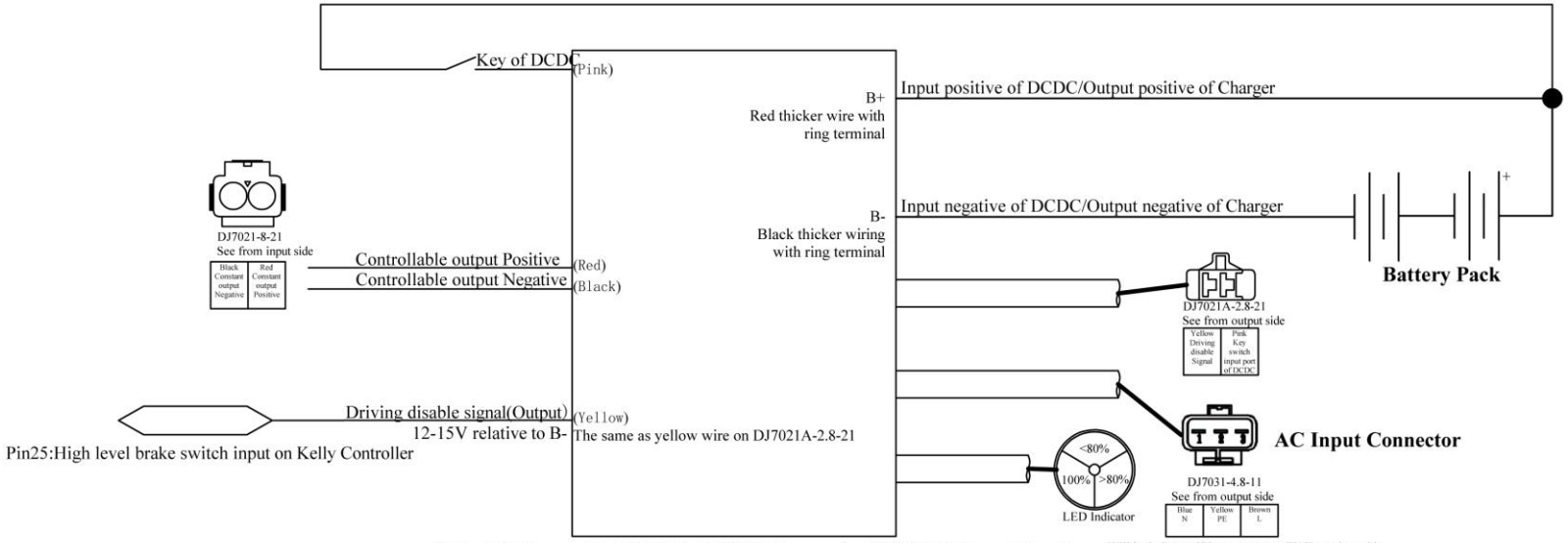

Kelly EV Power Unit OBC + DC/DC Converter (220VAC Input Type)

Will include one 3Pin connector to EU Type plug cable converter for each KCG for every shipment

Wiring Instruction:
1、Input：
Red wire with ring terminal： Positive of battery pack；
Black wire with ring terminal： Negative of battery pack；
Pink thinner wire：Key switch input wire of DCDC converter;

2、Output：
（Controllable output）Red wire on 2pin connector：Output positive of DCDC；
Black wire on 2pin connector：Output negative of DCDC.This output is enabled or disabled by the key switch input wire which is Pink thinner wire on DJ7021A-2.8-21

3,Output disable signal:
Yellow thinner wire:Output a 12V volt into high level brake switch input port of controller when input of charger(220VAC EU Type Plug) is connected to state grid.
12-15V relative to B-

AC vs. Battery vs. DC Output, three way isolation

						Wiring Diagram		KELLY CONTROLS, LLC
Mark		Subarea	Signatory		Date	07/08/2022		KCG
Design	Fany		Standardize	Fany		modification	Number	Proportion
Assessor	Dan							V2.3E
Technics	Qijie H		Authorize	Steven		Sum		

Figure 3: Kelly EV Power Unit Standard Wiring

5.4. Important Safety Precautions

Hazardous conditions may result if the Unite is not installed or operated correctly. Please read the following instructions to prevent personal injury or damage to the charger.

- Remove metal items like rings, bracelets and watches when working with batteries.
- The Unit must not be operated in damp, wet environment, or near heat sources.
- High voltage inside the case, may cause harm to the human body. If the Unit fails, please contact us. DO NOT disassemble the Unit.
- The Unit should be used where clean and well ventilated. Don’t sheltered inlet or outlet during charging, and make sure that both inlet and outlet have air space of at least 10cm.
- The Unit should be used to prevent children closer and touch.
- Prohibit using or storing near flammable, explosive goods.
- Do not wash with water, we recommend using a clean rag dipped a small amount of alcohol.
- Before charging, please connect the DC terminal to battery first, and then connect the AC terminal.
- No charging or after charging complete, be sure to unplug the DC terminal and AC terminal.

Warning:

1. Disconnect the AC input power before changing the setting of the charger.
2. Charger output voltage must be same with the nominal voltage of battery pack.
3. Batteries generate explosive Hydrogen and Oxygen gases during normal operation. Be sure to be installed in a well ventilated location.

6. Characteristics

6.1. Charging Curve

Kelly charger adopts Intelligent charging modes, which can achieve rapid charging and extend battery life. Charging curve is given below.

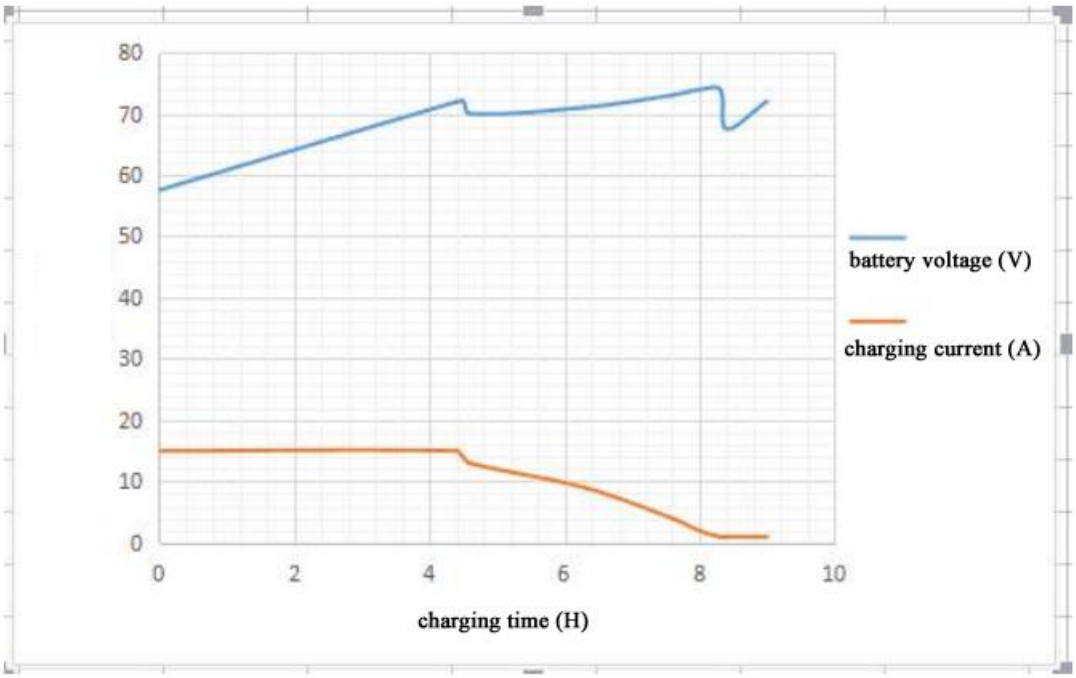

Figure 4: Charging Curve

Pulse charging can eliminate polarization and deepen chemical reaction. It increases the capacitance of the battery, saves energy, brings convenience to use.

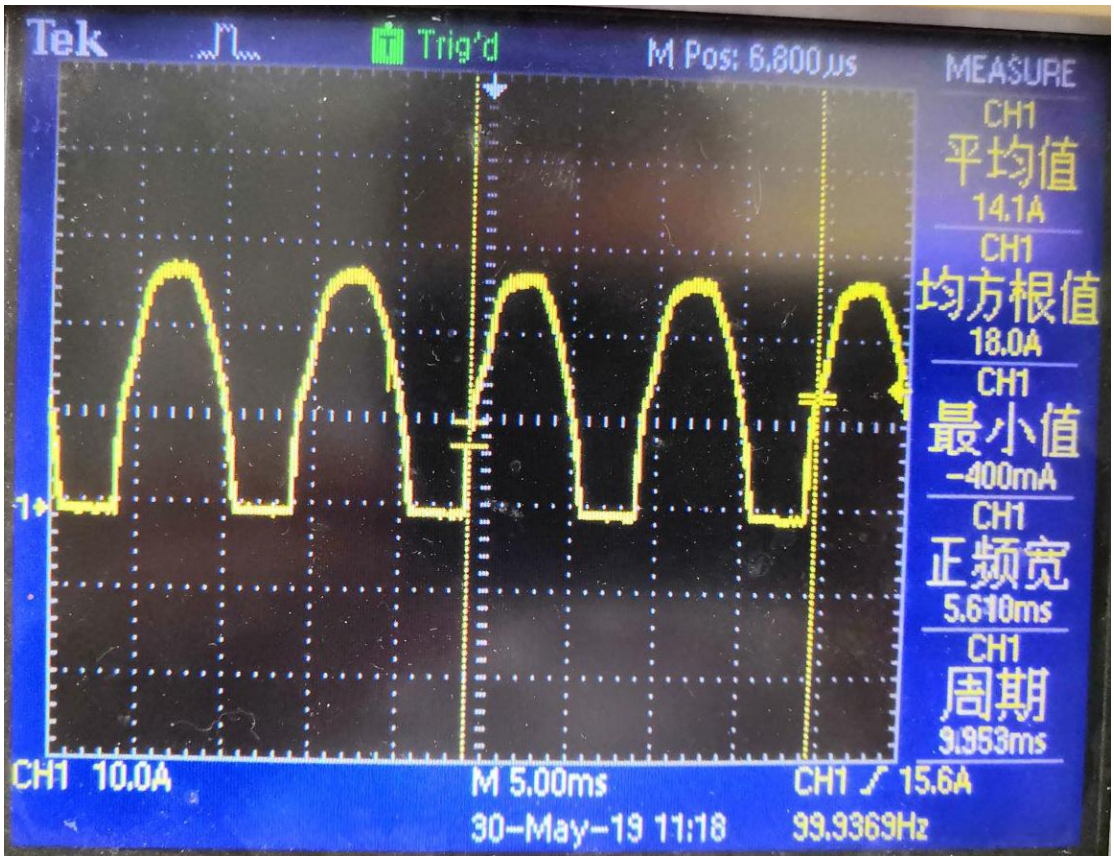

Figure 5: Charging Current Waveform

6.2. Indicator LEDs

NO.	Red LED	Green LED	Explanation
1	OFF	OFF	No AC power
2	ON	OFF	Charging
3	OFF	OFF	Charge complete
4	1.1 flash	OFF	Low battery voltage in operation
5	1.2 flash	OFF	High battery voltage at start up
6	1.3 flash	OFF	Low battery voltage at start up
7	2.3 flash	OFF	Over temperature error
8	3.2 flash	OFF	Reset error
9	4.1 flash	OFF	High input voltage error
10	4.2 flash	OFF	Low input voltage error

Note: The red LED will flash repeatedly when in fault.

6.3. Output Power Curve of DC/DC

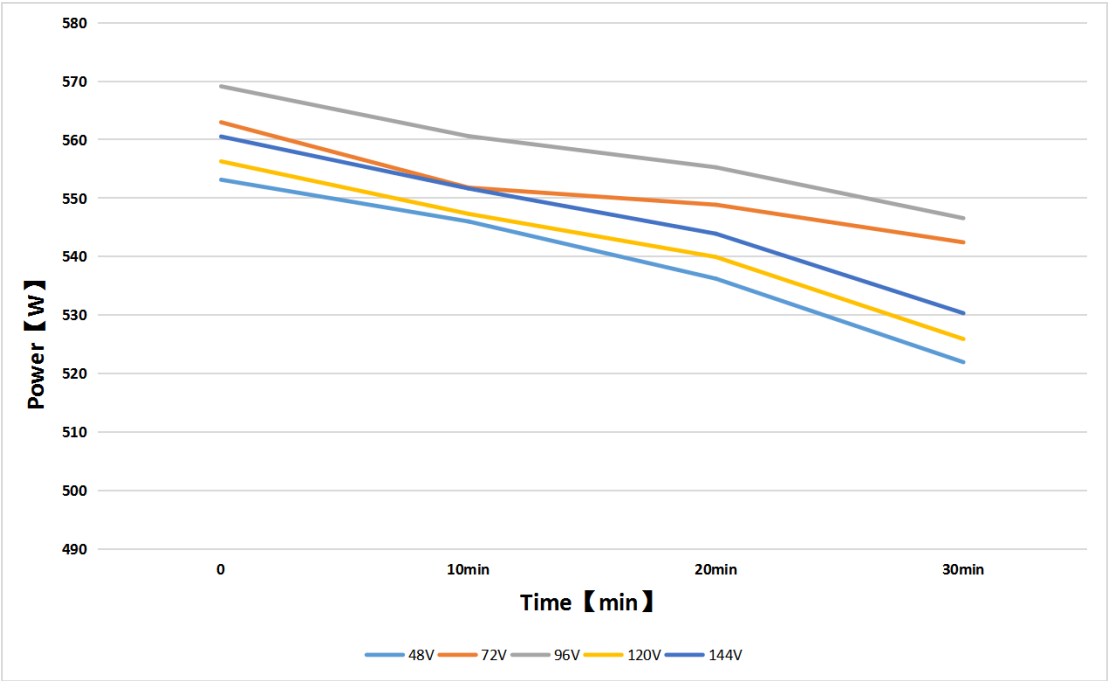

Figure 6: 480W DC/DC

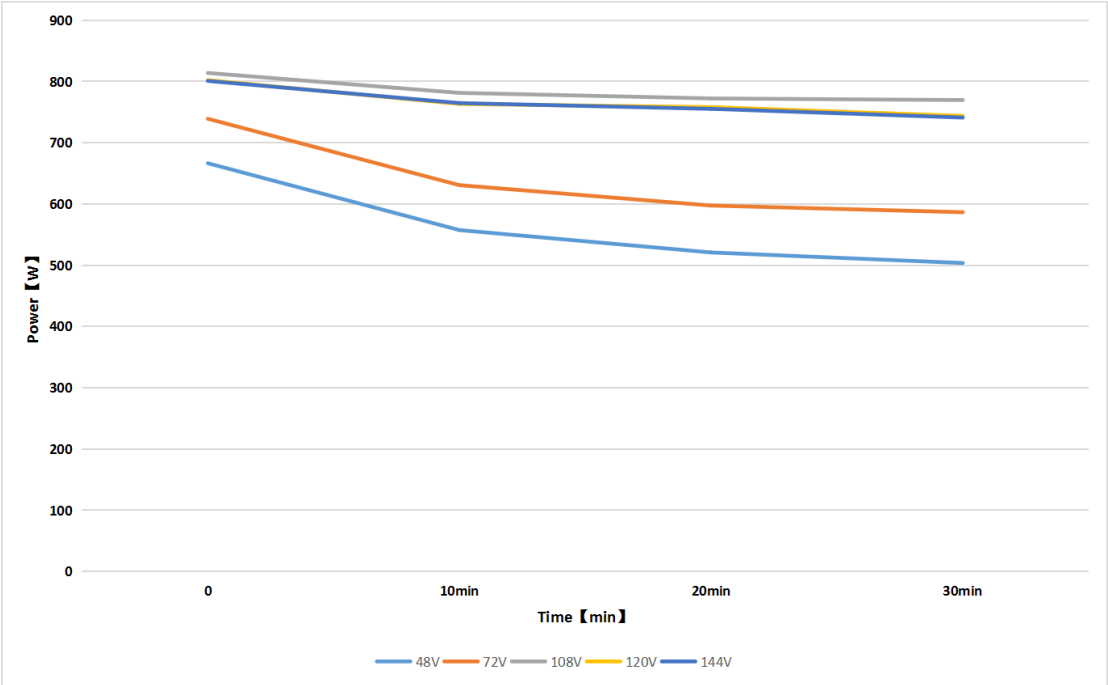

Figure 7: 600W DC/DC

6.4. Efficiency Values of DC/DC under Different Loads

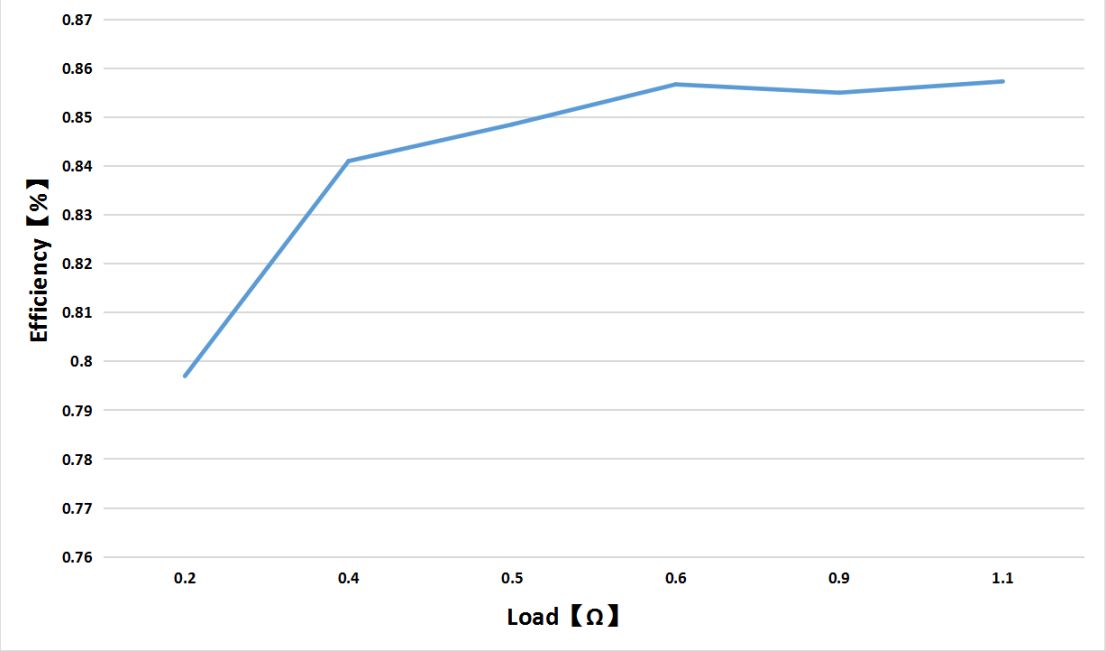

Figure 8: 48V Input Voltage

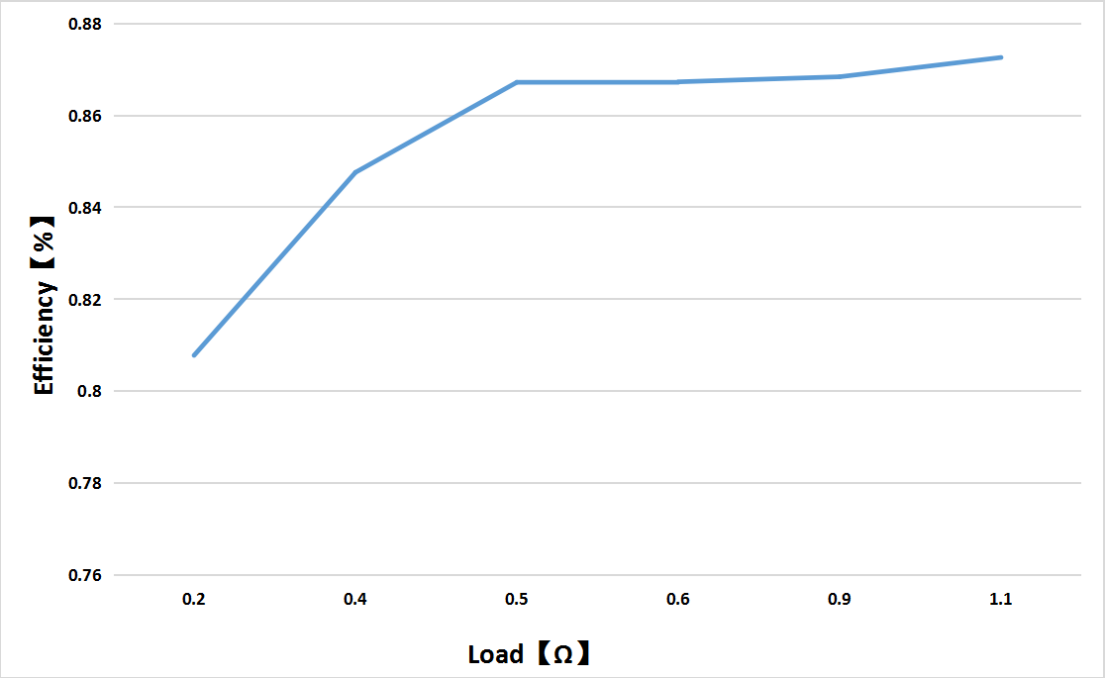

Figure 9: 72V Input Voltage

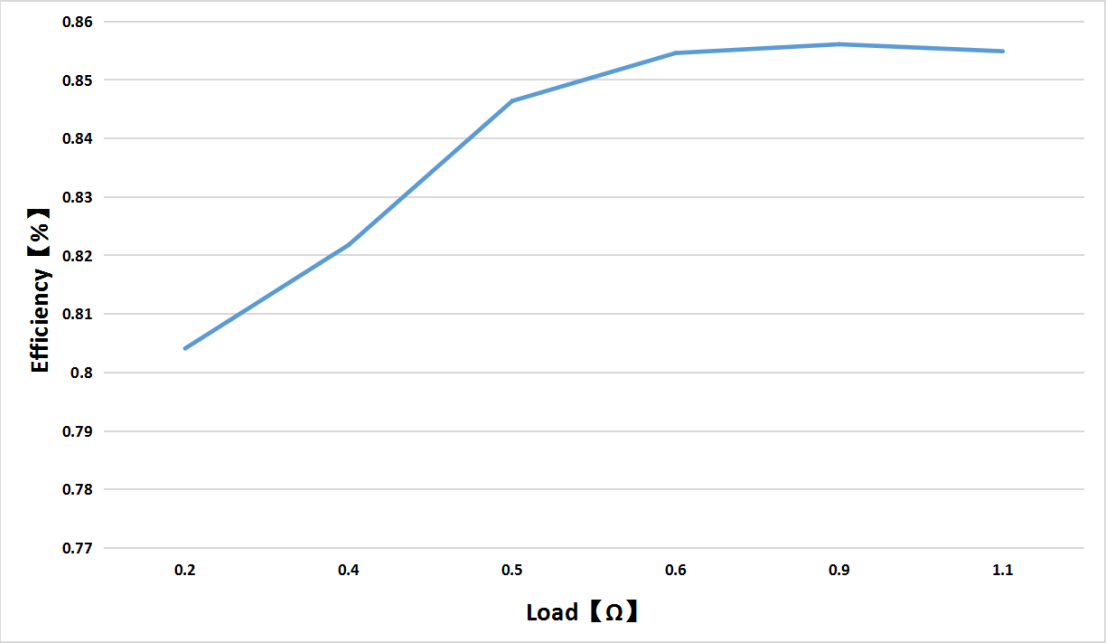

Figure 10: 96V Input Voltage

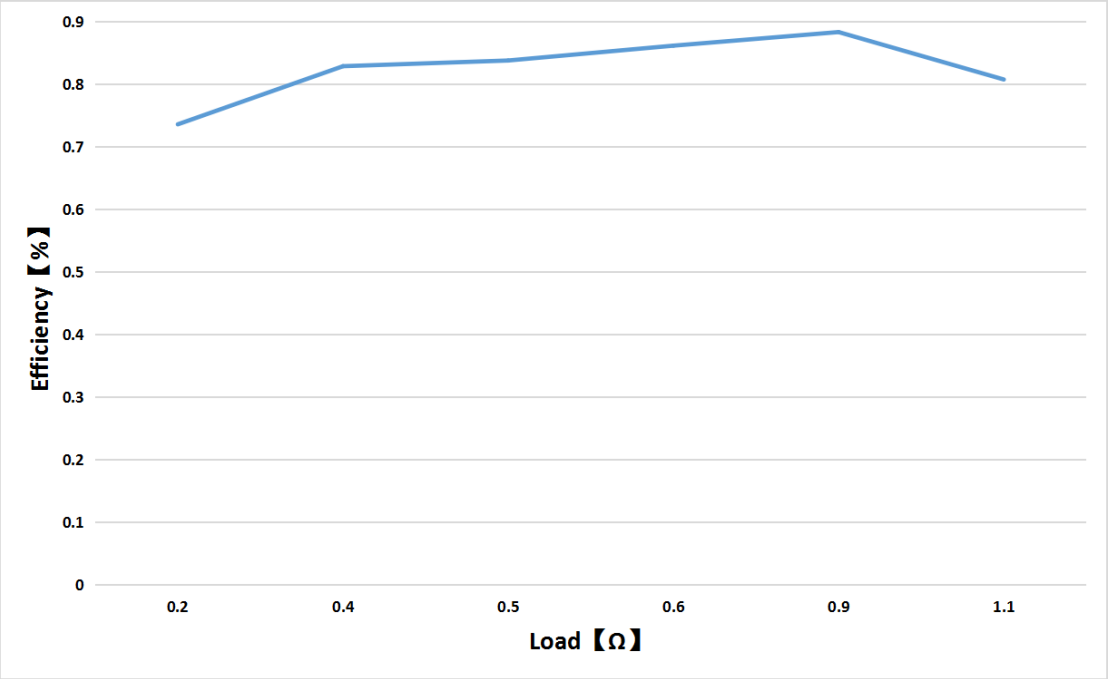

Figure 11: 120V Input Voltage

7. Warranty

There are no user-serviceable parts inside the Unit. Do not attempt to open it as this will void your warranty. However, periodic, exterior cleaning of the Unit should be carried out.

The Unit is a high powered device. When working with any battery powered vehicle, proper safety precautions should be taken that include, but are not limited to, proper training, wearing eye protection, avoidance of loose clothing, hair and jewelry. Always use insulated tools.

1. One year limited warranty
2. There are no warranty for defects or damages caused by the following reasons, including but not limited to:

a. Caused by faulty installation

b. Abuse or misuse including exposure to excessive heat or humid environment

c. Caused by disassembling or repair without authorization

d. Caused by natural disasters and force majeure

e. Caused by abnormal external forces

3. There shall be no responsibility or liability whatsoever on the part of the Warrantor or its employees and representatives for injury to any persons, or damage to property, or loss of income or profit, or any other consequential or resulting damage which may be claimed to have been incurred through the use or sale of the equipment, including any possible failure of malfunction of the equipment, or part thereof. The Warrantor assumes no liability for incidental or consequential damages of any kind.

Contact Us:

Kelly Controls, Inc
Home Page:
http://www.kellycontroller.com
E-mail:
sales@kelly-controls.com
Phone:
(01) 224 637 5092(US)
(+86) 551-64397760(China)
(+86) 139-56008360 (China)